SPECIFICATION OF LCD MODULE

CUSTOMER 客户名称	
PART NO. 产品型号	**OTM728 B-W-1**
PRODUCTS TYPE 产品内容	
REMARKS 备注	
SIGNATURE BY CUSTOMER 客户签署：	

APPROVED BY 李伟浩 Optima EnC	CHECKED BY 王国选 Optima EnC	ORGANIZED BY 郝黎明 Optima EnC

LCM System

1 **LCD Type**

- [x] STN
- [ ] FSTN
- [ ] DFSTN

2 **Viewing Angle**

- [x] Lower 6:00
- [ ] Upper 12:00
- [ ] Others

3 **Display Mode**

- [ ] Yellow Green positive
- [x] Blue Negative
- [ ] Grey positive
- [ ] FSTN positive
- [ ] FSTN negative

4 **Polarizer Mode**

- [ ] Reflective
- [ ] Transflective
- [x] Transmissive

5 **Connector**

- [ ] Pin
- [ ] Heat sealed
- [x] Zebra

6 **Thickness of Glass**

- [x] 1.1mm
- [ ] 0.4mm
- [ ] 0.55mm
- [ ] 0.7mm

7 **Backlight Mode**:

- [x] LED
- [ ] CCFL

8 **Backlight Color**

- [ ] Blue
- [ ] Amber
- [ ] Yellow Green
- [ ] Red
- [x] White
- [ ] Without backlight

9 **Temperature Grade**

- [ ] Normal temperature
- [x] Wide temperature
- [ ] Super wide temperature

•REVISION RECORD

REV. NO.	REV. DATE	DESCRIPTION OF REVISION	PAGE	REMARK
1.0	02/17/08	INITIAL RELEASE	ALL	

CONTENTS

1. FEATURES …… 5
2. MECHANICAL SPEC …… 5
3. ABSOLUTE MAXIMUM RATING …… 6
4. ELECTRICAL CHARACTERISTICS …… 6
5. ELECTRO-OPTICAL CHARACTERISTICS …… 8
6. BLOCK DIAGRAM …… 9
7. VOLTAGE REGULATOR CIRCUITS …… 9
8. TIMIING DIAGRAM …… 10
9. INSTRUCTION SET …… 11
10. STANDARD CHARACTER CODE TABLE…… 12
11. INITIALIZATION SEQUENCE …… 13
12. EXTERNAL DIMENSION …… 14
13. INTERFACE …… 15
14. PACKAGE INFORMATION…… 16
15. QC/QA PROCEDURE …… 17
16. RELIABILITY …… 18
17. HANDING PRECAUTIONS…… 19

1. FEATURES

•Display construction……	240*128 DOTS
•Display mode……	STN
•Display type……	Negative Transmissive
•Backlight……	LED/5.0V(WHITE)
•Viewing direction……	6 o'clock
•Operating temperature……	-20 to 70 ℃
•Storage temperature ……	-30 to 80℃
•Driving voltage……	Single power
•Driving method……	1/128 duty, 1/12 bias
•Type……	COB (Chip On Board)
•Controller/Drive IC……	T6963C
•Number of data line……	8-bit parallel
•Connector……	Pin

2. MECHANICAL SPEC

ITEM		WIDTH	HEIGHT	THICKNESS	UNIT
Module size		144	104.0	12.5(MAX)	mm
Viewing area		114	61.0	-	mm
Dot	Size	0.4	0.4	-	mm
	Pitch	0.44	0.44	-	mm
Diameter of mounting hole		Φ3.0			mm
Weight		About 180			g

3. ABSOLUTE MAXIMUM RATINGS

Parameter	Applicable pins	Condition	Rate value	Unit
Power supply voltage	VDD	Ta=25℃	-0.3～7.0	V
Power supply voltage	VIN	Ta=25℃	-0.3～VDD+0.3	V
Operating temperature range	Topr	Ta=25℃	-20～70	℃
Storage temperature range	Tstg	Ta=25℃	-30～70	℃

4. ELECTRICAL CHARACTERISTICS

Parameter	Applicable pins	Condition	MIN	TYP	MAX	Unit
Power supply voltage	VDD	-	4.5	5.0	5.5	V
“H” input voltage	VIH	-	VDD-0.2	-	VDD	V
“L”input voltage	VIL	-	0	-	0.8	V
“H” input voltage	VOH	-	VDD-0.3	-	VDD	V
“L” input voltage	VOL	-	0	-	0.3	V
“H”output resistor	ROH	VOUT= VDD-0.5	-	-	400	Ω
“L”output resistor	ROL	VOUT= 0.5V	-	-	400	Ω
Input pull-up resistor	RPU	-	50	100	200	KΩ
Frequency	Fosc	-	0.4	-	5.5	MHz
Operating current	IDD(1)	VDD=5.0v f=3.0MHz	-	3.3	6.0	MA
Static current	IDD(2)	VDD=5.0V	-	-	3.0	UA

4.1 LED ELECTRICAL/OPTLCAL CHARACTERISTICS

Item	Symbol	min	typ	max	Unit	Condition
Forward Voltage	Vf	-	5.0	5.1	V	If=200mA
Reverse Current	Ir	-	200	-	uA	Vr=5V
Dominant wave length	λd	-	X=0.29 Y=0.30	-	nm	If=200mA
Spectral Line Half width	Δλ	-	-	-	mm	If= mA
Luminance	Lv	150	220	-	cd/㎡	If=200mA

4.2LED ABSOLUTE MAXIMUM RATINGS

Item	Symbol	Condition	Rating	Unit
Reverse Voltage	Vr	Ta=25℃	5	V
Absolute maximum forward current	Ifm	Ta=25℃	250	mA
Power description	pd	Ta=25℃	1250	mW

4.2.1 LED ARRAY BLOCK DIAGRAM

(LED DICE 1×10= 10 dices)

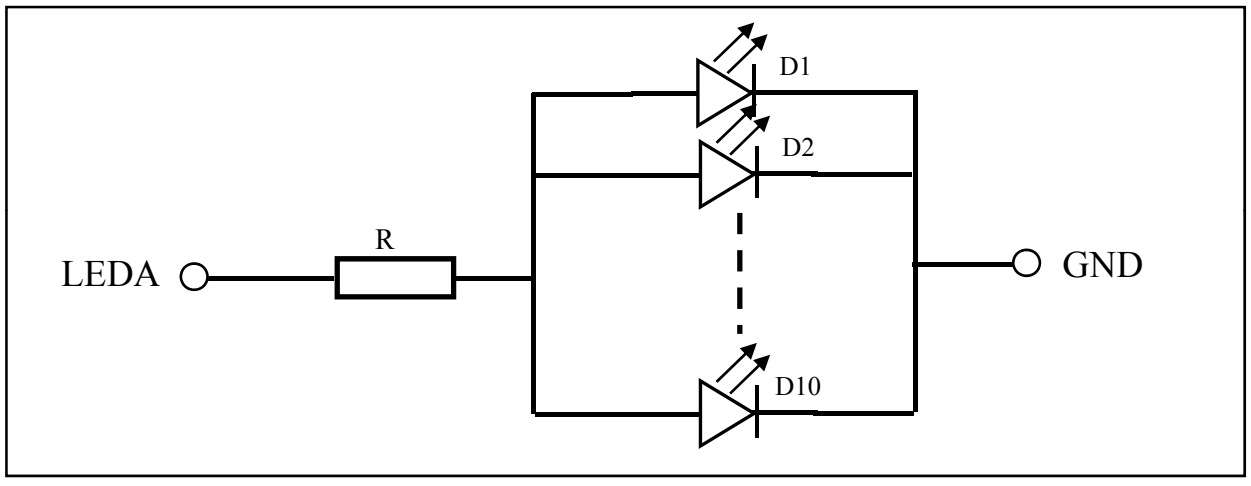

4.2.2 LED POWER SOURCE

	Option	Power source	Jumper setting
LED	A	20A/2GND	R8-R10、R114-R17

5. ELECTRO-OPTICAL CHARACTERISTICS

ITEM	SYMBOL	CONDITION	MIN.	TYP.	MAX.	UNIT	NOTE
Contrast ratio	K	φ=0	1.4	4	-	-	1
Response time (rise)	Tr	φ=0	-	250	300	ms	2
Response time (fall)	Tf	φ=0		250	350	ms	2
Viewing angle	φ	K ≥2.0	-40 -- +40			deg.	3
	θ		-30 -- +30				

Note 1: Definition of Contrast Ratio "K"

$$K = \frac{\text{Brightness of non-selected segment(A)}}{\text{Brightness of selected segment(B)}}$$

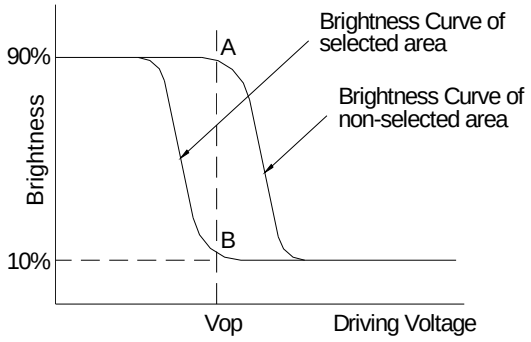

Note 2: Definition of Optical Response Time

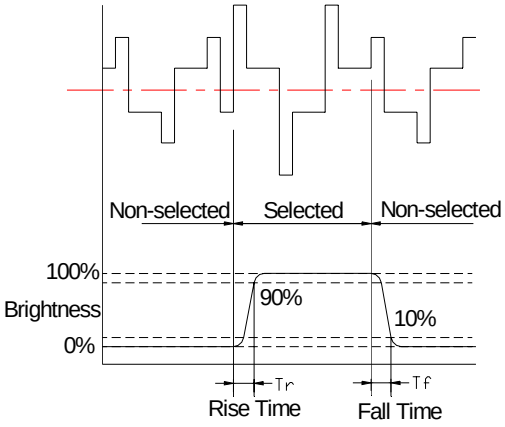

Note 3: Definition of Viewing Angle

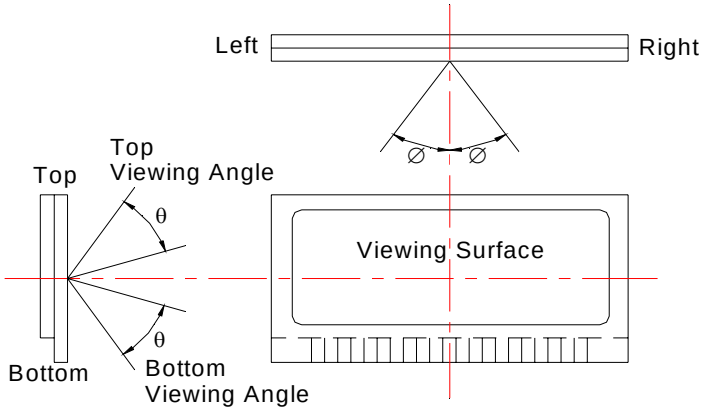

Please select either top or bottom viewing angle

6. BLOCK DIAGRAM

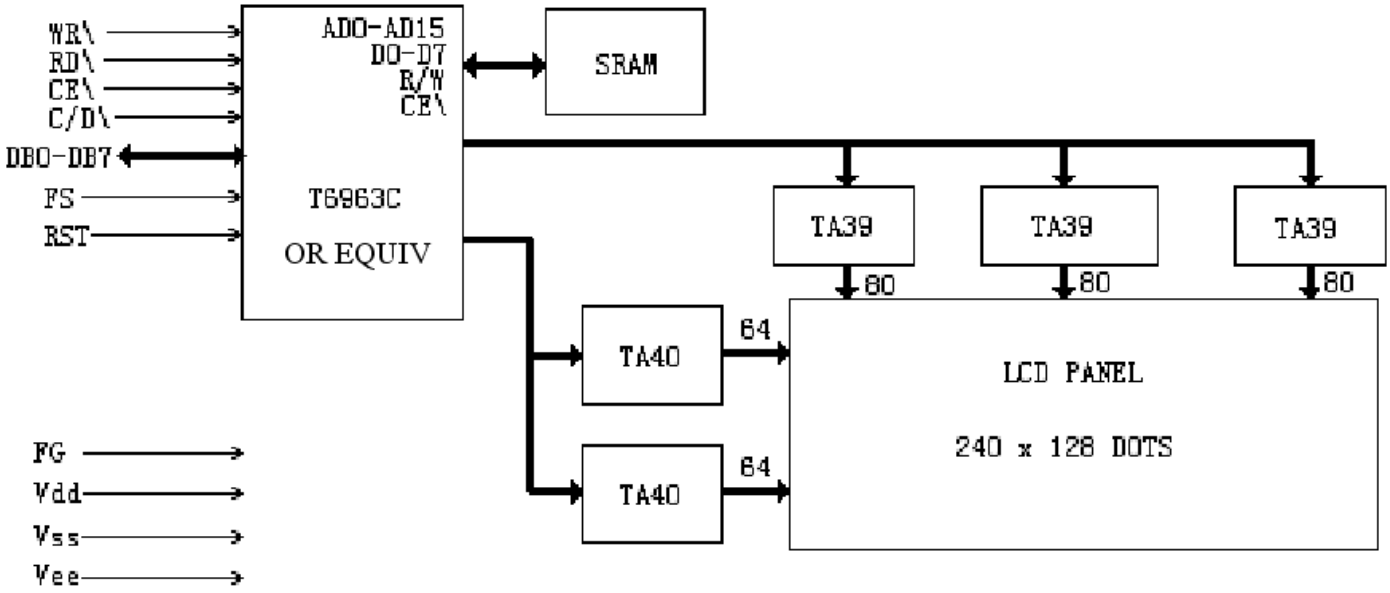

7. VOLTAGE REGULATOR CIRCUITS

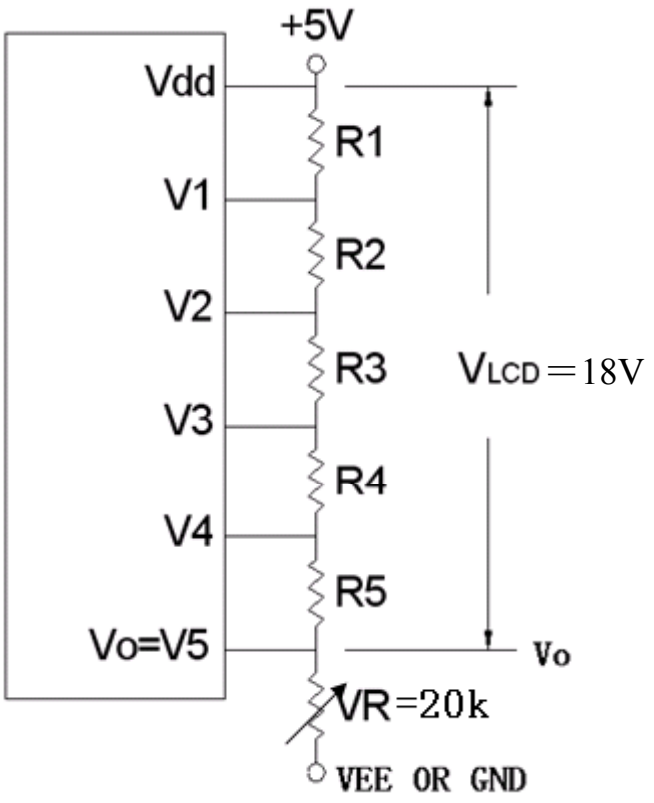

8. TIMING DIAGRAM

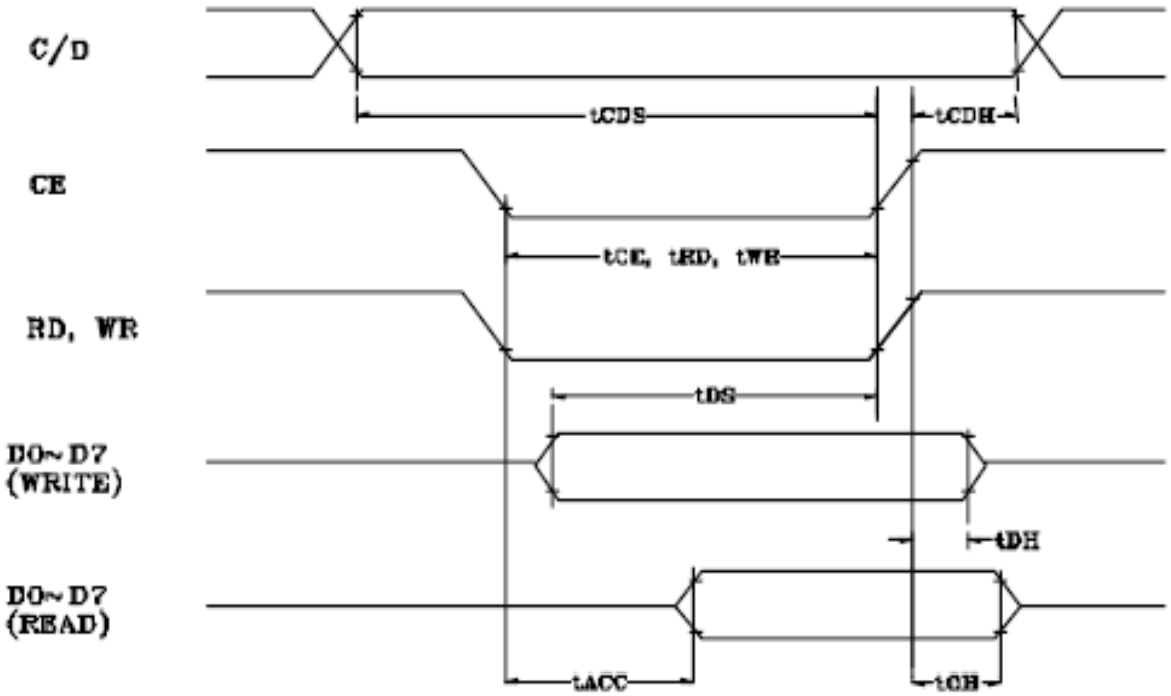

9. INSTRUCTION SET

DISPLAY CONTROL INSTRUCTION

The display control instructions control the internal state of the S6B0108. Instruction is received from MPU to S6B0108 for the display control. The following table shows various instructions.

Instruction	RS	R/W	DB7	DB6	DB5	DB4	DB3	DB2	DB1	DB0	Function
Display on/off	L	L	L	L	H	H	H	H	H	L/H	Controls the display on or off. Internal status and display RAM data is not affected. L: OFF, H: ON
Set address (Y address)	L	L	L	H	Y address (0 - 63)						Sets the Y address in the Y address counter.
Set page (X address)	L	L	H	L	H	H	H	Page (0 - 7)			Sets the X address at the X address register.
Display start line (Z address)	L	L	H	H	Display start line (0 - 63)						Indicates the display data RAM displayed at the top of the screen.
Status read	L	H	Busy	L	On/ Off	Reset	L	L	L	L	Read status. BUSY L: Ready H: In operation ON/OFF L: Display ON H: Display OFF RESET L: Normal H: Reset
Write display data	H	L	Write data								Writes data (DB0:7) into display data RAM. After writing instruction, Y address is increased by 1 automatically.
Read display data	H	H	Read data								Reads data (DB0:7) from display data RAM to the data bus.

10. STANDARD CHARACTER CODE TABLE

CHARACTER CODE MAP
The relation between character codes and character pattern(CG TYPE 0101)

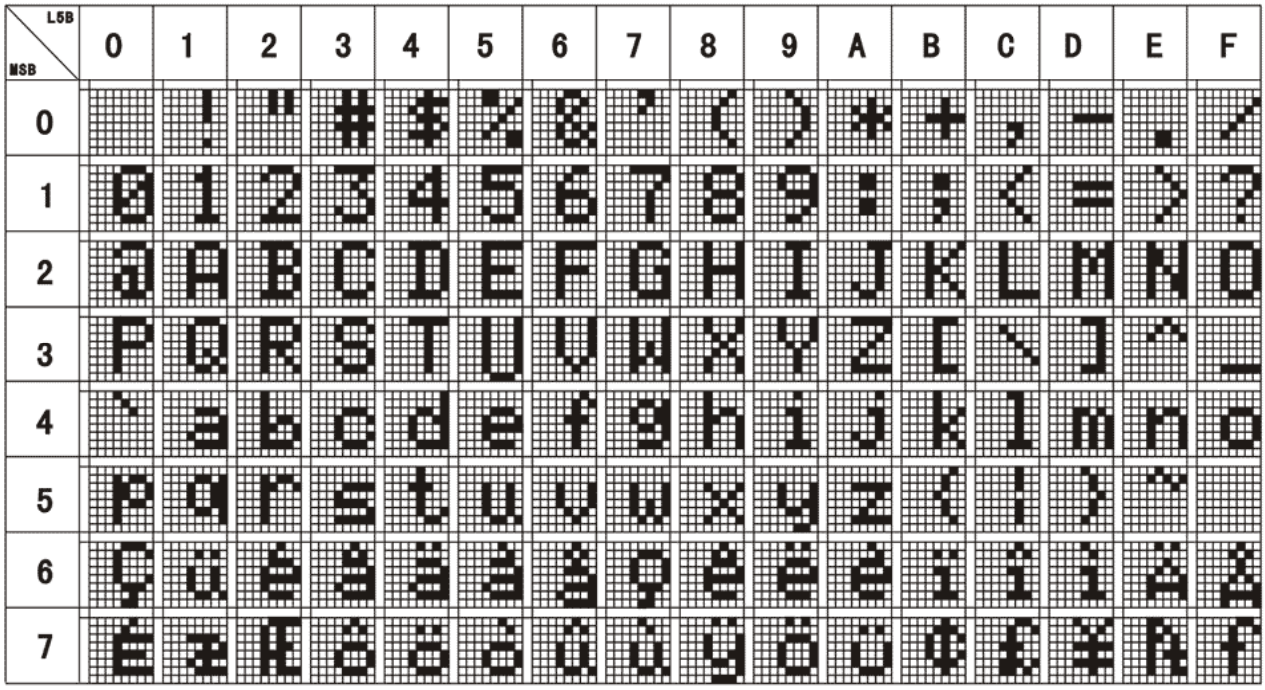

11. INSTRUCTION SEQUENCE

INIT:

```
MOV DAT1,#00H
 MOV DAT2,#00H
 MOV COM,#40H
 LCALL PR1
 MOV DAT1,#1EH
 MOV DAT2,#00H
 MOV COM,#41H
 LCALL PR1
 MOV DAT1,#00H
 MOV DAT2,#00H
 MOV COM,#42H
 LCALL PR1
 MOV DAT1,#1EH
 MOV DAT2,#00H
 MOV COM,#43H
 LCALL PR1
 MOV COM,#0A7H
 LCALL PR12
 MOV COM,#80H
 LCALL PR12
 MOV COM,#98H
 LCALL PR12
        RET
```

12. EXTERNAL DIMENSION

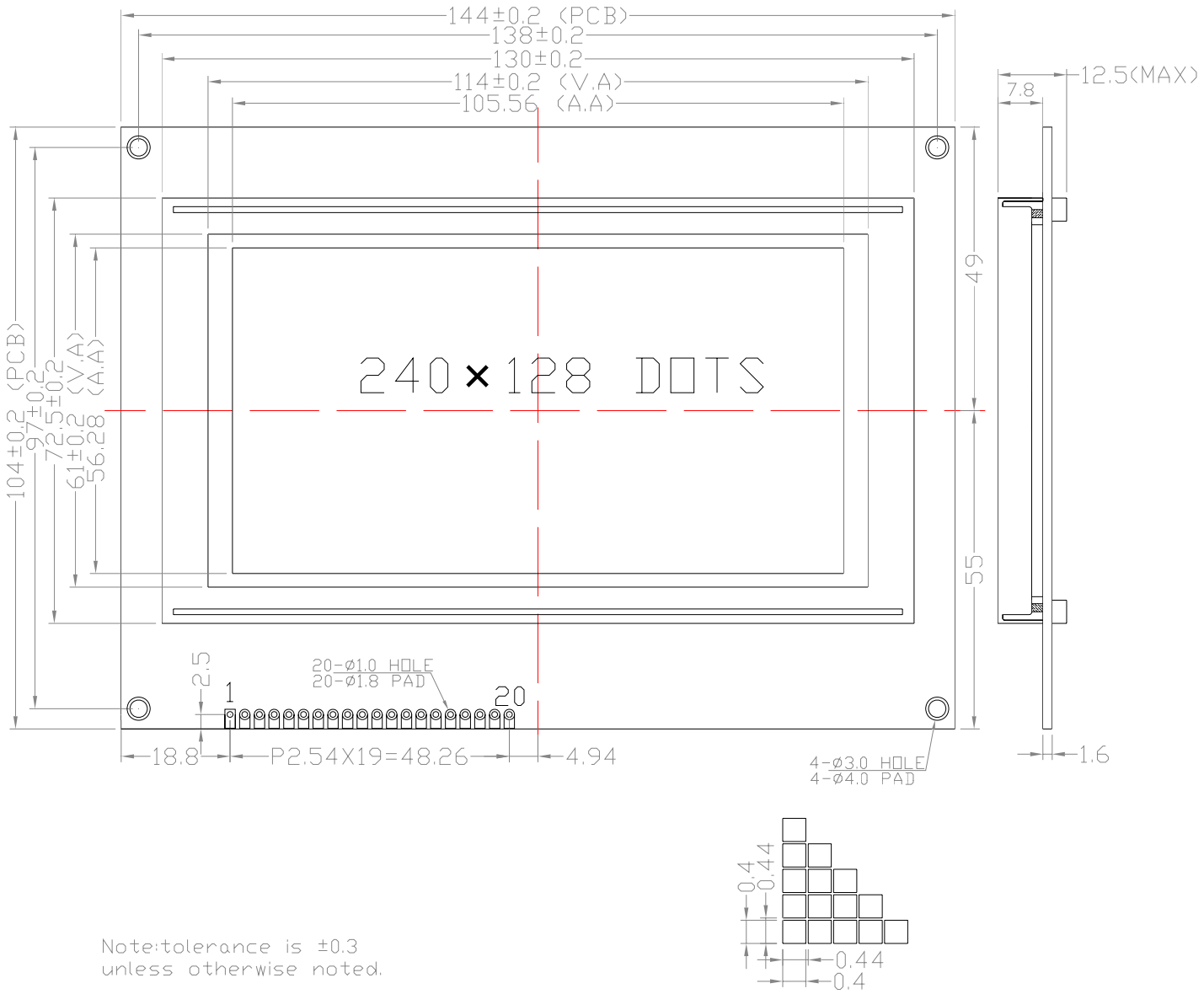

13.INTERFACE

PIN	SYMBOL	LEVEL	INSTRUCTION
1	FG	0V	Surface contact GND
2	GND	0V	Ground contact（GND）
3	V_{DD}	5.0V	Power Supply Voltage
4	V_0	LCD Drive Voltage	Adjust Contrast
5	WR	L	Write signal
6	RD	L	Read signal
7	CE	L	IC select signal
8	C/D	H/L	H: COMMAND； L: DATA
9	RST	L	Reset signal, low is effective
10	DB0	H/L	DATA 0
11	DB1	H/L	DATA 1
12	DB2	H/L	DATA 2
13	DB3	H/L	DATA 3
14	DB4	H/L	DATA 4
15	DB5	H/L	DATA 5
16	DB6	H/L	DATA 6
17	DB7	H/L	DATA 7
18	FS	H/L	Char style select(L:8x8,H:6x8)
19	VEE	-15.0V	Negative voltage
20	LEDA	5.0V	Back LED Anode

14. PACKAGE INFORMATION

A Box include 25pcs

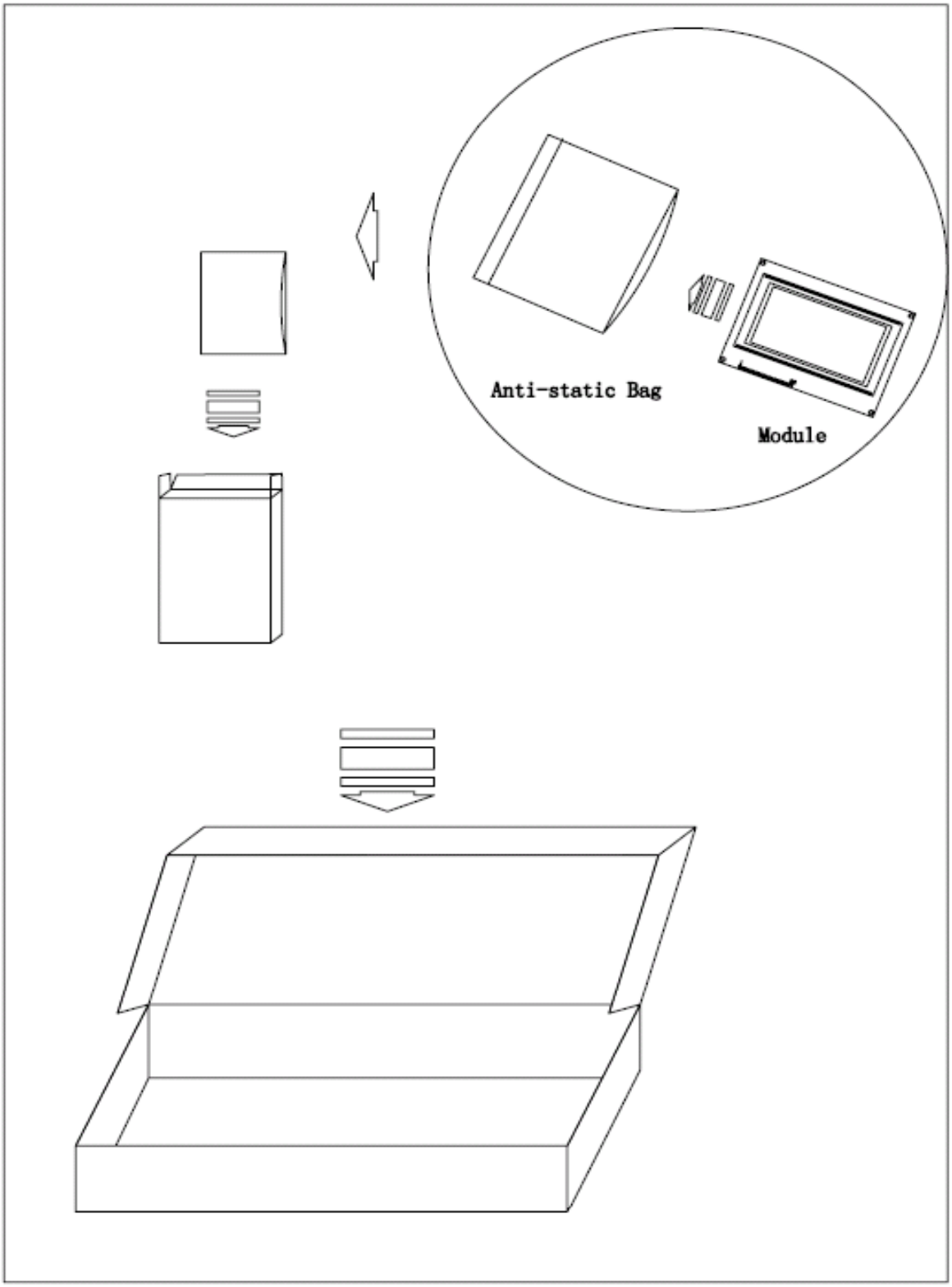

15. QC/QA PROCEDURE

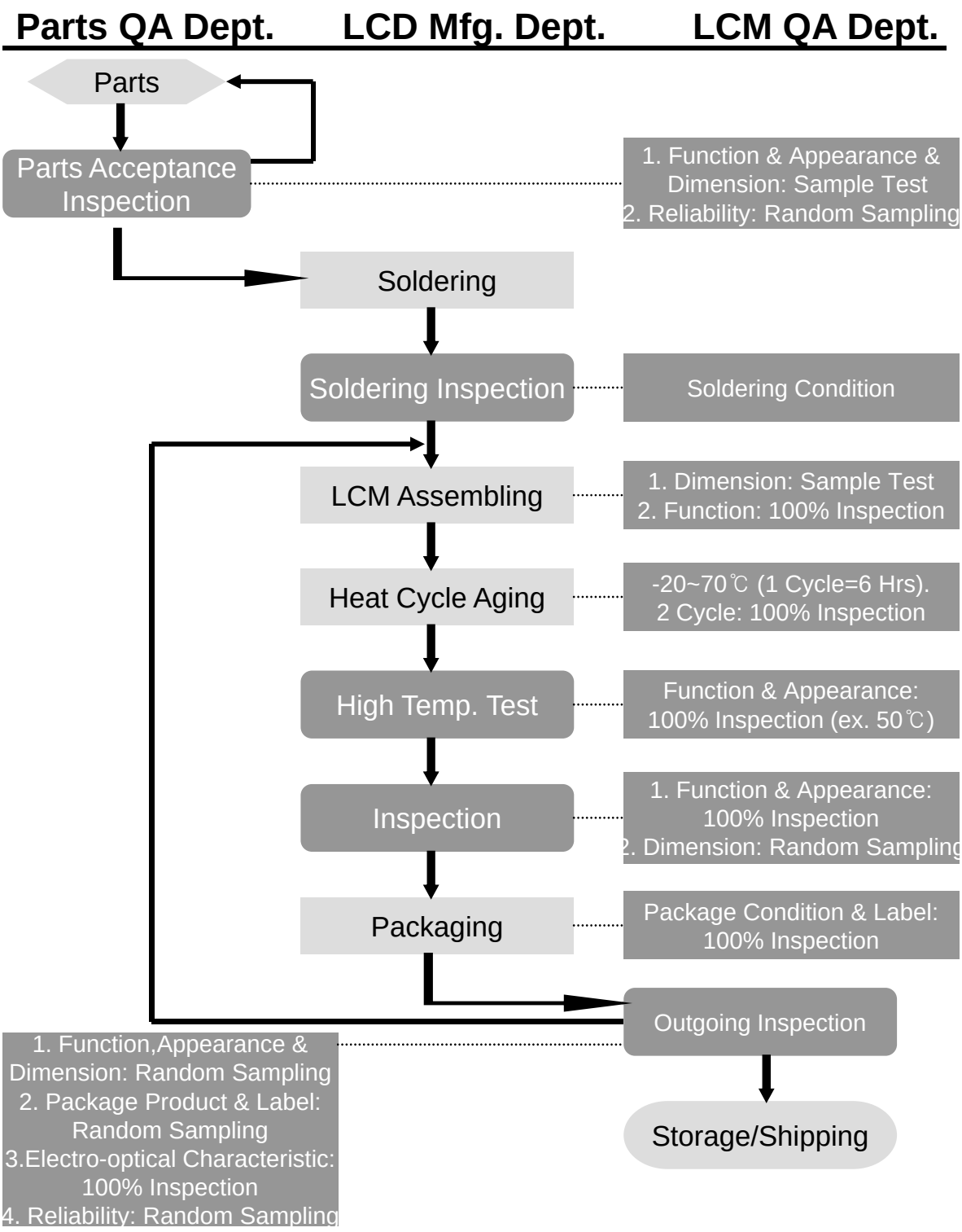

16. RELIABILITY

•Operating life time:

Longer than 50000 hours (at room temperature without direct irradiation of sunlight)

•Reliability Characteristics:

Item	Test	Criterion
High temp	70℃ / 200 Hrs	■Total current consumption should be below double of initial value ■Contrast ratio should be within initial value±50% ■No defect in cosmetic and operational function is allowable
Low temp.	-20℃ / 200 Hrs	
High humidity	40℃ * 90%RH / 200 Hrs	
Thermal shock	-20℃→25℃→70℃→25℃ /5 Cycles (30min) (5min) (30min) (5min)	
Vibration	1.Operating time: Thirty minutes exposure in each direction (x, y, z) 2.Sweep Frequency (1min):10Hz→ 55Hz →10Hz 3.Amplitude: 0.75mm double amplitude	

17. Handling Precaution

1. Limitation of Application:
Optrex products are designed for use in ordinary electronic devices such as business machines, telecommunications equipment,measurement devices and etc. Please handle the products with care. (see below)
Optrex products are not designed,intended ,or authorized for use in any application which the failure of the product could result in a situation where personal injury or death may occur . these applications include, but are not limited to . life-sustaining equipment,nuclear control devices , aerospace equipment , devices related to hazardous or flammable materials , etc.[If Buyer intends to purchase or use the Optrex Products for such unintended or unauthorized applications , Buyer must secure prior written consent to such use by a responsible officer of Optrex Corporation.]Should Buyer purchase or use Optrex Products for any such unintended or unauthorized application [without such consent].Buyer shall indemnify and hold Optrex and its officers. employees. subsidiaries, affiliates and distributors harmless against all claims, costs, damages and expenses , and reasonable attorney's fees,arising out of , directly or indirectly, any claim of personal injury or death associated with such unintended or unauthorized use, even if such claim alleges that Optrex was negligent regarding the design or manufacture of the part.
2.Industrial Rights and Patents
Optrex shall not be responsible for any infringement of industrial property rights of third parties in any country arising out of the application or use of Optrex products, except which directly concern the structure or production of such products.

No Press and Shock!

If pressure to LCD, orientation may be disturbed.
LCD will broken by shock!

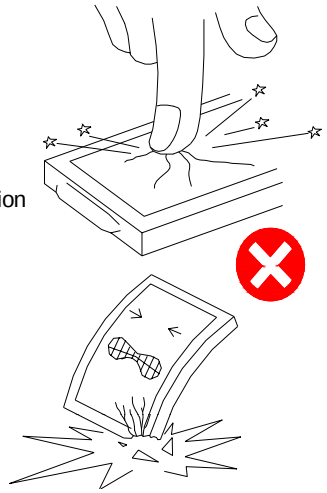

Don't Swallow or Touch Liquid Crystal!

Liquid Crystal may be leaked when display is broked.
If it accidentally gets your hands, wash then with water!

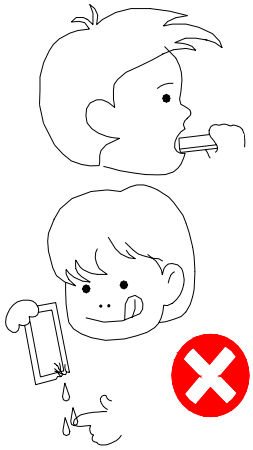

Don't not Scratch!

Polarizer is a soft material and can easily be scratched.

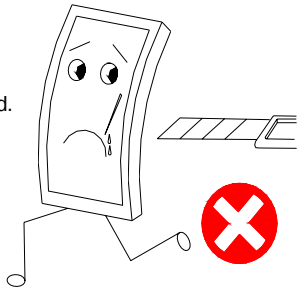

No DC Voltage to LCD!

DC volrage or driveing higher than the specified voltage will reduce the lifetime of the LCD.

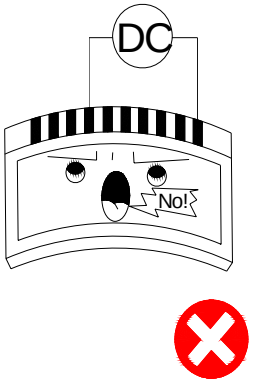

Don't Press the Metallic Frame and Disassemble the LCM

Pressure on the metallic frame and PCB may deform the conductive rubber or break the liquid crystal cell and back light, which will cause defects.

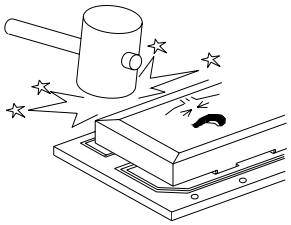

LCD may be shifted or conductive rubber may be reshaped, which will cause defects.

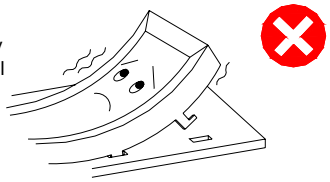

Slowly Peel Off Protective Film!

Avoid static electricity.

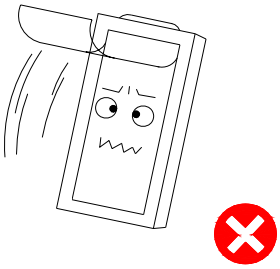

Avoid Static Electricity!

Please be sure to ground human body and electric apploances during work.

It is preferable to use conductive mat on table and wear cotton clothes or conduction processed fiber. Synthetic fiber is not recommended.

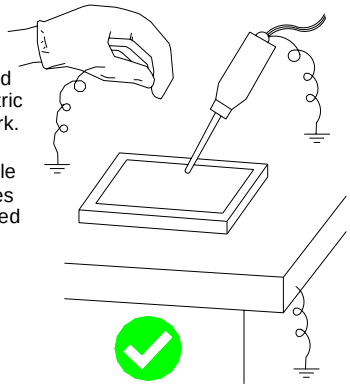

Wear Gloves While Handing!

It is preferable to wear gloves to avoid damaging the LCD.

Please do not touch electrodes with bare hands or make them dirty.

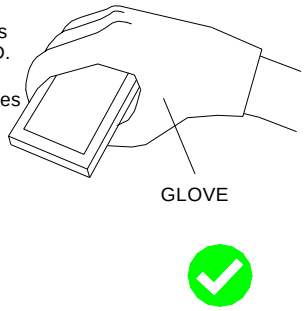

Keep Away From Extreme Heat and Humidity!

LCD deteriorates.



Use Alcohol to Clean Terminals!

When attaching with the heat seal or anisontropically conductive film, wipe off with alcohol before use.

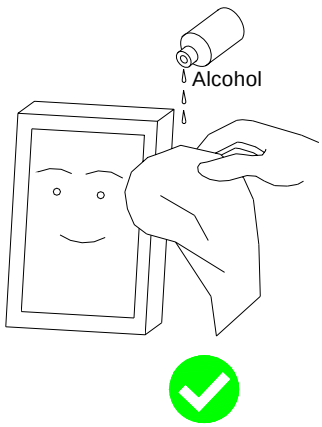

Don't Drop Water on LCD!

Note that the presence of waterdrops or dew in the LCD panel may deteriorate the polarizer or corrade electrode.

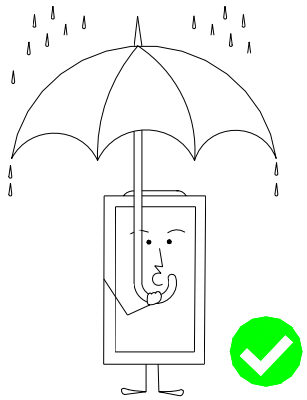

Precaution in Soldering LCD Module

Basic instructions: Solder I/O terminals only.
Use soldering iron without leakage.
(1)Soldering condition to I/O terminals
Temperature at tip of the iron: 280±10℃
Soldering time: 3~4 sec.
Type of solder: Eutectic solder (containing colophony-flux)
*Please do not use flux because it may soak into LCD Module or contaminate it.
*It is preferable to peel off protective film on display surface after soldering I/O terminals is finished.
(2)Remove connector or cable
*When you remove connector or cable soldered to I/O terminals, please confirm that solder is fully melted. If you remove by force, electrodes at I/O terminals may be damaged(or stripped off).
*It is recommended to use solder suction machine.

Long-term Storage

If it is necessary to store LCD modules for a long time, please comply with the following procedures.
If storage condition is not satisfactory, display(especially polarizer) may be deteriorated or soldering I/O terminals may become difficult(some oxide is generated at I/O terminals plating).
1.Store as delivered by Optrex
2.If you store as unpacked,put in anti-static bag,seal its opening and store where it is not subjected to direct sunshine nor fluorescent lamp.
3.Store at temperature 0 to +35℃ and at low humidity.Please refer to our specification sheets for storage temperature range and humidity condition.

Long-term Storage

Please use power supply with built-in surge protection circuit.